JK Audio

RemoteMix Sport

PORTABLE REMOTE MIXER

FEATURES

- Three XLR Microphone Inputs
- Three ¼" Headphone Jacks
- Works with conventional phone lines
- Works with analog and digital PBX or ISDN phones
- Works with cell phones
- XLR clean mix or phone mix output
- Transmit VU meter
- Mic / Line switch on Mic 1
- Built-in monitor speaker and talk back microphone
- Runs 28 hours on two 9-volt batteries or included AC adapter
- DTMF / pulse keypad
- Keypad lockout switch
- Auxiliary handset input for use as a standard telephone

The RemoteMix Sport takes the great features of our RemoteMix 3 and adds a third microphone and headphone jack and more. Sports broadcasters asked, and we delivered. We combined an audio mixer, headphone amplifier, telephone hybrid, and PBX telephone interface in one rugged unit that's perfect for remote broadcasts, sporting events, and field reporting from any location.

Simply plug the RemoteMix Sport into an analog phone line, connect up to three microphones and headphones, and you're ready to call into the station. In your headphones you will hear a mix of all three microphones, as well as the audio coming back from the other side of the phone call. You can also listen to any signal connected to the line level Headphone Cue Input jack. The line level male XLR output includes a switch which selects either a clean mic mix output or the phone line return + mic mix combination. The combination of this clean mic-only output and the new headphone cue input makes RemoteMix Sport perfect for use as a front end mixer for your POTS or ISDN codec. The built-in time-delayed peak limiter and VU meter help to control transmit levels, while the built-in push-to-talk condenser microphone and monitor speaker are a real help during equipment set-up and station breaks.

Universal Handset Interface? Simply unplug the handset from the phone and plug the coily cord directly into the PBX jack on RemoteMix Sport. With a three-position switch which accommodates electret, dynamic, and carbon handset microphone types, the RemoteMix Sport emulates the type of microphone that was in the handset, allowing you to use your professional microphones and headphones during the broadcast. Its three settings cover most analog and digital PBX sets, as well as ISDN sets.

Cell phones: Simply plug RemoteMix Sport into the 2.5 mm headset jack of your wireless cell phone. Your phone will recognize RemoteMix Sport as a headset, allowing you to send and receive audio through the phone.

JK Audio
www.jkaudio.com / 1311 East 6th Street Sandwich, IL 60548 USA / Phone: [815] 786.2929 / Toll Free: [800] 552.8346
Copyright © 2008 JK Audio, Inc.

JK Audio

RemoteMix Sport

PORTABLE REMOTE MIXER

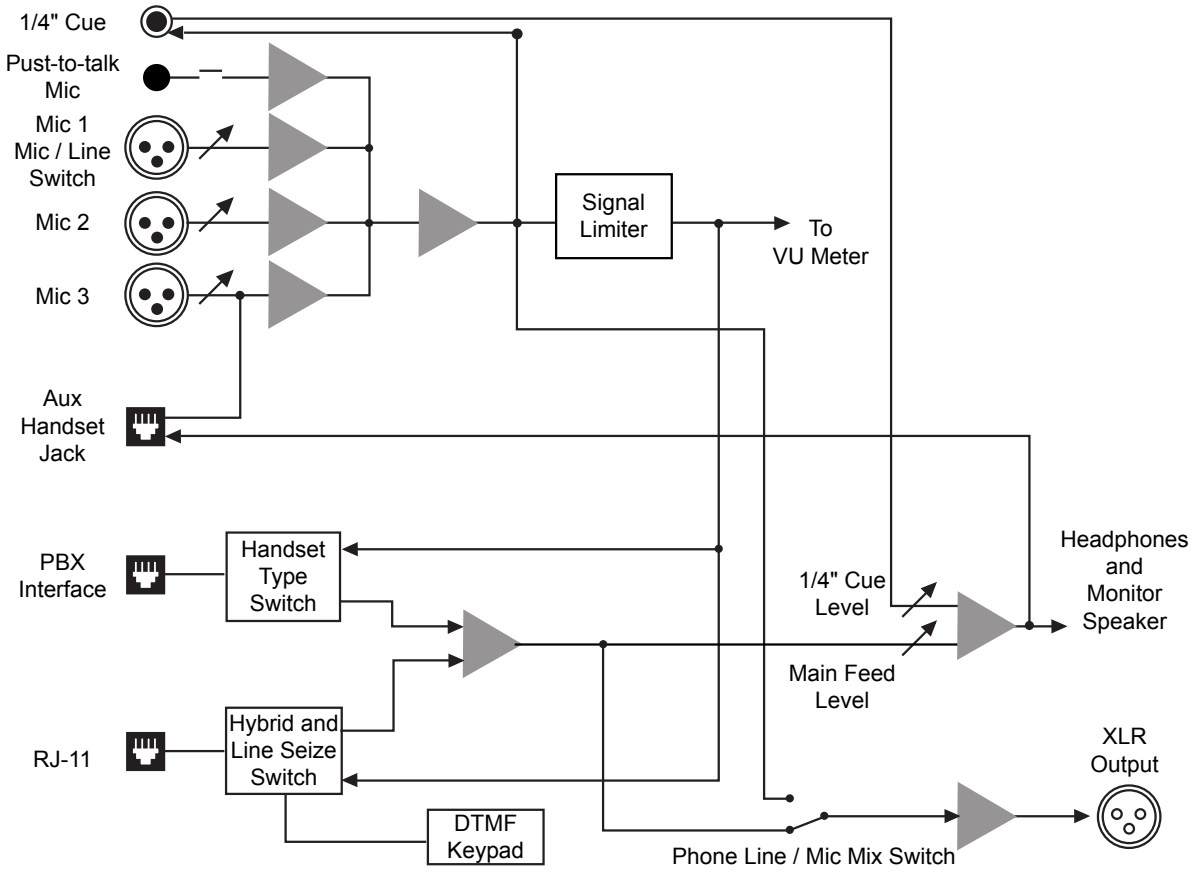

Specifications

Input	Impedence	Level
Female XLR Mics (3)	1 k ohms	15 mV RMS (-34 dBu) nom
Headphone Cue 1/4"	50 ohms	250 mV RMS (-10 dBu) nom

Mic 1 has a Mic/ Line pad switch
Line = +6 dBm nominal

Output		
Balanced Male XLR	200 ohms	500 mV RMS (-4 dBu) nom
Headphone 1/4" Stereo (3)	8 ohms	1/2 watt per channel

Phone Line Connector:	RJ11C	Aux Handset Jack:	Biased for electret handsets
Isolation:	1500 VAC	PBX Handset Interface:	Biased for electret, dynamic, and carbon handsets
Ringer:	0.9B REN		
Keypad:	DTMF / Pulse	1/4″ Wireless Telephone Adapter	included TRS 1/4″ to 2.5 mm reverse wired cable.
Weight:	2.5 lbs		
		Size:	6.5" x 4.6" x 2.2" (16.5 x 11.7 x 5.6cm)

JK Audio
www.jkaudio.com ／ 1311 East 6th Street Sandwich, IL 60548 USA ／ Phone: [815] 786.2929 ／ Toll Free: [800] 552.8346
Copyright © 2008 JK Audio, Inc.

JK Audio

RemoteMix Sport

PORTABLE REMOTE MIXER

Rear View

Left Side

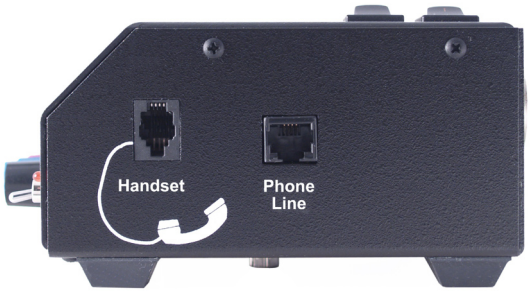

Right Side

JK Audio
www.jkaudio.com ／ 1311 East 6th Street Sandwich, IL 60548 USA ／ Phone: [815] 786.2929 ／ Toll Free: [800] 552.8346
Copyright © 2008 JK Audio, Inc.